Photoelectric lighting controller - Professional Line

Light Sensor Dual

DALI-2 Input Device - surface, rd.
EAN 4007841 057428
Article number 057428

DALI-2 | Dämmerungsschalter + Eco-Modus | IP54 | 2 - 1000 Lux | Max 4 m | CE | 5 years Herstellergarantie steinel-professional.de/garantie

Function description

Light measurement in perfection. The Light Sensor Dual photo-cell controller with DALI-2 input device measures directed and diffuse light, watches over areas below the sensor and measures the room brightness. Combining the measurement results reduces error influences. DALI-2 Input Device enables sensors to communicate collected sensor data to higher-level lighting management systems

Technical specifications

Dimensions (L x W x H)	56 x 95 x 95 mm
With motion detector	No
Manufacturer's Warranty	5 years
Settings via	Bus
Version	DALI-2 Input Device - surface, rd.
PU1, EAN	4007841057428
Type	Constant-lighting controller
Application, place	Outdoors, Indoors
Application, room	classroom, one-person office, open-plan office, high-bay warehouse, conference room / meeting room, Indoors
Colour	white
Colour, RAL	9003
Includes corner wall mount	No
Installation site	wall, ceiling
Installation	Surface wiring, Wall, Ceiling
IP-rating	IP54

Material	Plastic
Mains power supply	12 – 22,5 V
Power supply, detail	DALI bus
Steuerausgang, Dali	Addressable/slave
Technology, sensors	Light sensor
Mounting height	2,00 – 4,00 m
Mounting height max.	4,00 m
Twilight setting	2 – 1000 lx
Basic light level function	No
Main light adjustable	No
Twilight setting TEACH	No
Constant-lighting control	No
Interconnection	Yes
Type of interconnection	Master/slave
Interconnection via	DALI bus

Light Sensor Dual

DALI-2 Input Device - surface, rd.
EAN 4007841 057428
Article number 057428

Technical specifications

Ambient temperature	-20 – 50 °C

Accessories

EAN 4007841 009151	Remote control Smart Remote
EAN 4007841 056735	Black cover for IR-sensors

Dimension Drawing

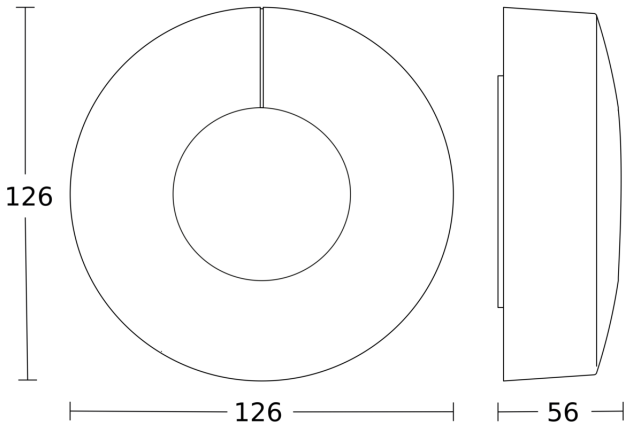
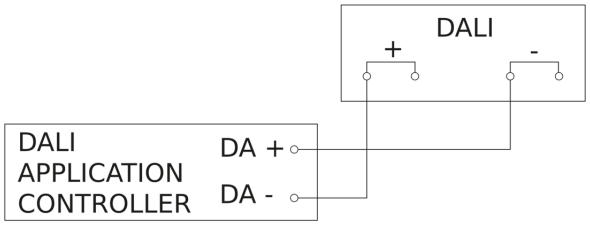
Circuit diagram